HOU 5HBSM C

HOURGLASS Tap Range
Hourglass 5 Hole Bath Shower Mixer Chrome

Specification

Product Type:	Bathroom Taps
Main Construction Material:	Brass
Mount Type:	Deck Mounted
Handle Type:	Lever Handle
Connection Inlet:	3/4" BSP
Connection Outlet:	M24 Flow Straightener
Number of Tap Holes:	5
Valve/Cartridge Type:	3/4" Ceramic Disc Valve
Plumbing System Requirements:	Suitable for Nominally Balanced Supply Pressures Only
Minimum Dynamic Pressure:	0.4 bar
Maximum Dynamic Pressure:	5.0 bar
Maximum Hot Water Temperature: °C	65
Maximum Static Pressure: (bar)	10
Flow Type:	Single Flow
Isolation Included:	No
Check Valve Supplied:	No

Features:

- Long life and easy to use 1/4 turn ceramic disc valves
- Metal back nuts for added durability
- Includes 1.75m hose and rub-clean anti-limescale handset
- Minimum working pressure of 0.4 bar

Product Certifications:

17 L/Min

Dimensions (measurements in mm)

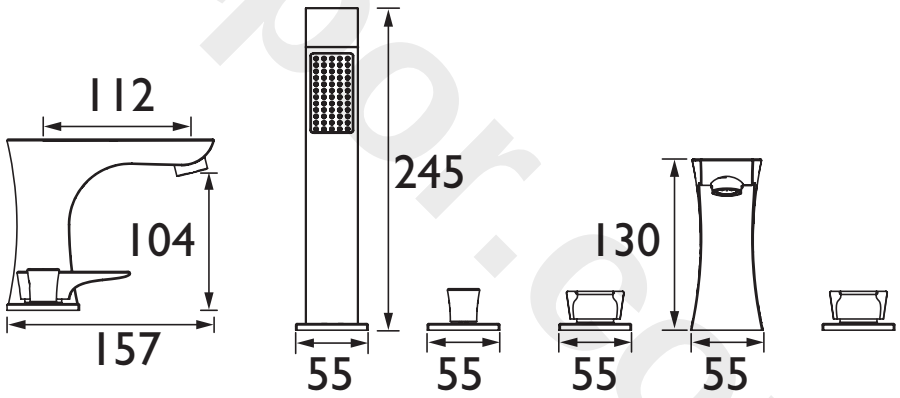

For more products, visit our website:
http://www.bristan.com

Flow Rates (l/min)

System Pressure (bar)	0.4	0.5	1	2	3	5
HOU 5HBSM C	19.1	21.3	30.8	42.6	54.2	69.97

TECHNICAL DATA SHEET

TOP QUALITY 5 YEAR GUARANTEED

BRISTAN

D4

Bristan, Birch Coppice Business Park, Dordon, Tamworth, B78 1SG. Web Site: www.bristan.com Telephone: 0330 026 6273. Email: enquire@bristan.com.
The information contained on this page was correct at date of issue. Fitting Dimensions are provided as a guide only. Some variation may occur due to manufacturing tolerances. Bristan pursues a policy of continuing improvement in design and performance of its products and so reserves the right to change specifications without prior notice.

www.envapor.com